A Series
General Purpose Snap-acting Switches

Features/Benefits

- ***Low cost—high performance***
- ***Long electrical life***
- ***Single and double pole***
- ***Sealed actuator option available***

Typical Applications

- ***Enclosure equipment***
- ***Garage door openers***
- ***Vending machines***

Specifications

CONTACT RATING: From low level* to 30.1 AMPS @ 277 V AC.
ELECTRICAL LIFE: 75,000 cycles at 25 AMPS @ 250 V AC, 200,000 cycles at 15 AMPS @ 250 V AC.
INSULATION RESISTANCE: 1,000 M ohm min.
DIELECTRIC STRENGTH: 1,000 Vrms min. @ sea level.
OPERATING TEMPERATURE: –67°F to 185°F (–55°C to 85°C).
OPERATING FORCE: 20 oz. (567 grams) max. SP models. 40 oz. (1134 grams) max. DP models at actuator button.
MOUNTING: Torque screws 3 in/lbs max.
MOUNTING NUT: 20 in/lbs max. torque

* Low Level=conditions where no arcing occurs during switching, i.e., 0.4 VA max. @ 20 V AC or DC max.

NOTE: Specifications and materials listed above are for switches with standard options. For information on specific and custom switches, consult Customer Service Center.

Materials

SWITCH HOUSING: Heat resistant phenolic (UL 94V-0).
ACTUATOR BUTTON: Heat resistant phenolic (UL 94V-0).
SPRING: Copper alloy.
PIVOT: Brass alloy for models up to 15 AMPS.
Copper for 25 AMP models.
MOVABLE CONTACTS: Gold alloy for ratings 1 AMP or less. Fine silver for ratings up to 15 AMPS. Silver alloy for ratings of 30.1 AMPS.
STATIONARY CONTACTS: Gold alloy on brass base alloy for ratings 1 AMP or less. Fine silver welded on brass base alloy for ratings greater than 1 AMP up to 15 AMPS. Fine silver welded on copper alloy for ratings 30.1 AMPS.
TERMINALS: Brass alloy for 1 AMP up to 15 AMPS. Copper alloy for 30.1 AMPS.

Build-A-Switch

To order, simply select desired option from each category and place in the appropriate box. Available options are shown and described on pages J-56 through J-59. For additional options not shown in catalog, consult Customer Service Center.

A [ ] [ ][ ] [ ][ ] [ ][ ] 4 A [ ]

Series
A General Purpose Snap-acting Switches

No. Poles
S SP
D DP

Operating Force
KH* 20 oz./567 grams
PD** 30 oz./850 grams
GG* 5 oz./142 grams
PF** 40 oz./1134 grams

Electrical Rating
C2 15 A, 125, 250 V AC; 3/4 HP, 125 V AC; 1 1/2 HP, 250 V AC
F3 25 A, 125, 250 V AC; 1 HP, 125 V Ac; 2 HP, 250 V AC; 2 A, 24 V DC
F5 1 A, 125 V AC, 30 V DC

Actuator
P0 Pin plunger
T0 Lever
A0 Lever roller
A2 Lever roller, high force
BB Large red button
B1 Large black button
J0 High overtravel plunger
L0 Leaf
Q0 High operating position plunger
W0 Leaf roller

Terminations
4A .250" quick connect

Circuitry
C DT
W ST N.C.
Y ST N.O.

* Single Pole
** Double Pole

SERIES

A GENERAL PURPOSE SNAP-ACTING SWITCHES

NO. POLES

S SINGLE POLE SWITCH

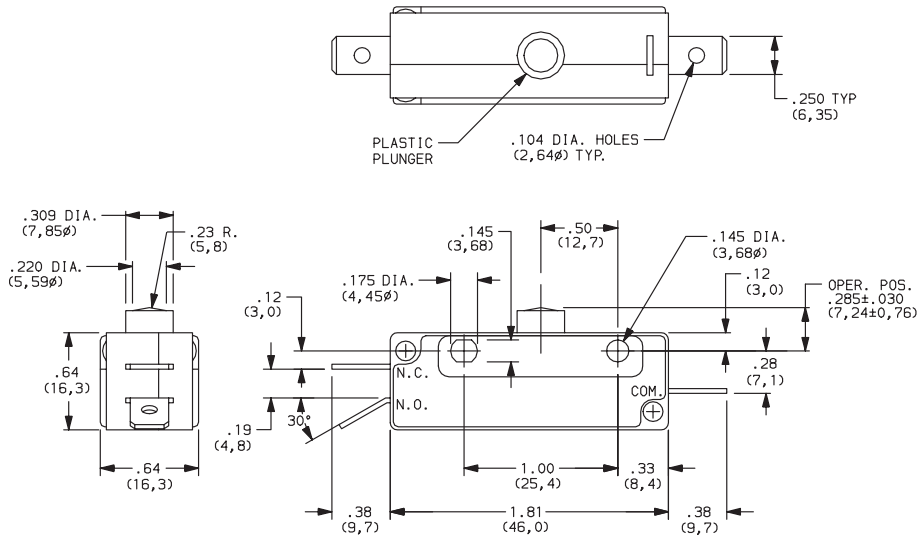

Mounting holes will accept pins or screws
of .139 dia. (3,53) max., on 1.000 (25,40) centers.

D DOUBLE POLE SWITCH

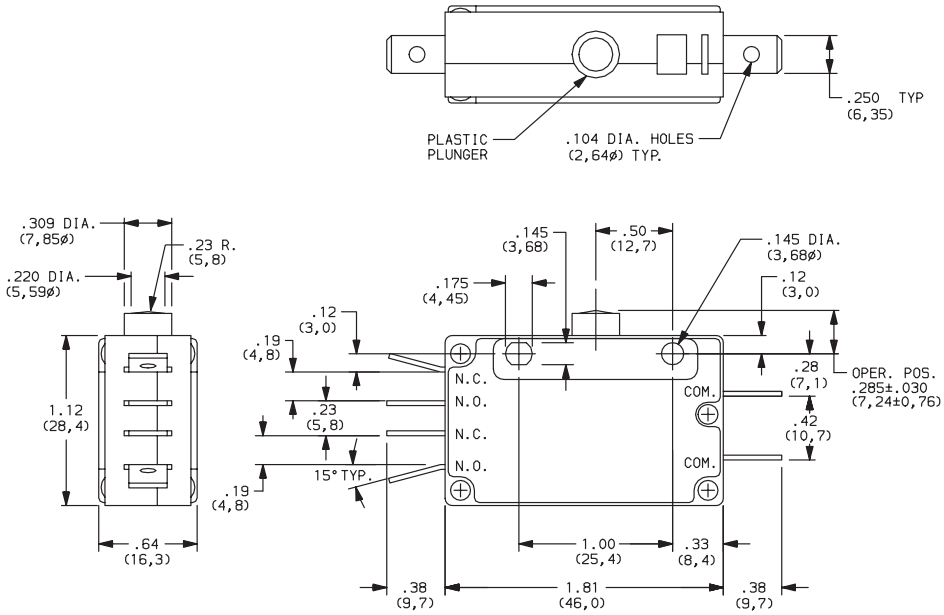

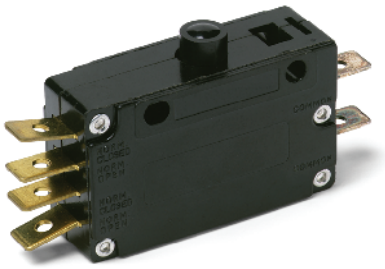

Mounting holes will accept pins or screws
of .139 dia. (3,53) max., on 1.000 (25,40) centers.

NOTE: To select switching function, see CIRCUITRY section, page J-59.

Third Angle Projection

Dimensions are shown: Inch (mm)
Specifications and dimensions subject to change

OPERATING FORCE

OPTION CODE	NO. POLES	BASIC SWITCH OPERATING FORCE (OZ./GRAMS)
KH	SP	20 567
PD	DP	30 850
GG	SP	5 142
PF	DP	40 1134

NOTE: Operating force varies with actuator, see ACTUATOR option section.

ELECTRICAL RATING

OPTION CODE	CONTACT MATERIAL		ELECTRICAL RATING
	MOVABLE CONTACT	STATIONARY CONTACT	
C2	Fine silver.	Fine silver welded on brass base alloy.	15 AMPS @ 125 & 250 V AC; 3/4 HP @ 125 V AC; 1-1/2 HP @ 250 V AC.
F3	Silverl alloy.	Silver welded on copper base alloy.	25 AMPS @ 125 & 250 V AC; 1 HP @ 125 V AC; 2 HP @ 250 V AC; 2 AMPS @ 24 V DC.
F5	Gold alloy.	Gold alloy on brass base alloy.	From low level* to 1 AMP @ 125 V AC, 30 V DC.

* Note: See Technical Data section of this catalog for RoHS compliant and compatible definition and specifications.

All models c UL us with all options.

Contact Customer Service Center for availability and delivery of nonstandard ratings.

* Low Level=conditions where no arcing occurs during switching, i.e., 0.4 VA max. @ 20 V AC or DC max.

AVAILABLE COMBINATIONS

ELECTRICAL RATING	OPERATING FORCE (OZ./GRAMS)			
	GG 5 142	KH 20 567	PD 30 850	PF 40 1134
C2	•	•	•	•
F3	x	•	•	•
F5	•	•	•	•

• AVAILABLE
x NOT AVAILABLE

Third Angle Projection

Dimensions are shown: Inches (mm)
Specifications and dimensions subject to change

ACTUATOR

OPTION CODE	FIG.	DIM. A	DIM. B	DIM. C	DIM. D	DIM. E	DIM. F
P0	1	.50 (12,7)	.285 ± .030 (7,24 ± 0,76)	–	–	–	–
A0	3	1.38 (35,1)	.718 ± .062 (18,24 ± 1,57)	.375 dia. (9,53Ø)	.50 (12,7)	.50 (12,7)	–
A2	4	1.25 (31,8)	.718 ± .062 (18,24 ± 1,57)	.375 dia. (9,53Ø)	.50 (12,7)	–	–
B1	6	1.50 (38,1)	.40 ± 0.1 (10,2 ± 2.54)	.98 dia. (24,9Ø)	–	–	–
BB	6	1.50 (38,1)	.40 ± 0.1 (10,2 ± 2.54)	.98 dia. (24,9Ø)	–	–	–
J0	5	.50 (12,7)	.810 ± .030 (20,6 ± 0,8)	.38 (9,7)	.25 dia. (6,4Ø)	–	–
L0	2	1.62 (41,1)	.312 ± .062 (17,92 ± 1,57)	.50 (12,7)	–	–	–
Q0	5	.50 (12,7)	.670 ± .030 (17,02 ± 0,76)	.38 (9,6)	.25 dia. (6,4Ø)	–	–
T0	7	1.50 (38,1)	.318 ± .062 (8,08 ± 1,57)	.50 (12,7)	.50 (12,7)	–	–
W0	8	1.50 (38,1)	.801 ± .062 (20,34 ± 1,57)	.375 dia. (9,53ø)	.50 (12,7)	–	–

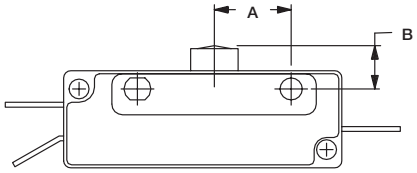

FIG. 1
High Overtravel Plunger

NOTE: The "H0" high overtravel plunger option provides .100 (2,54) min. overtravel and longer mechanical life (1,000,000 operations typical).

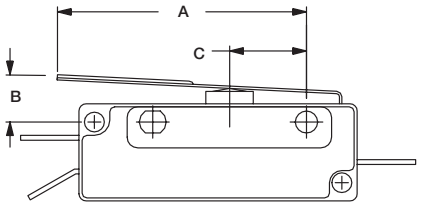

FIG. 2
Leaf

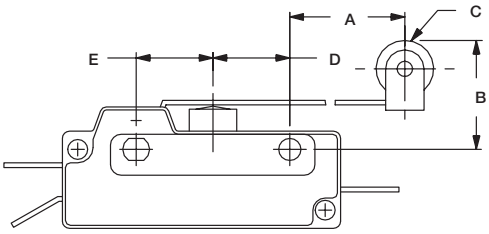

FIG. 3
Lever Roller

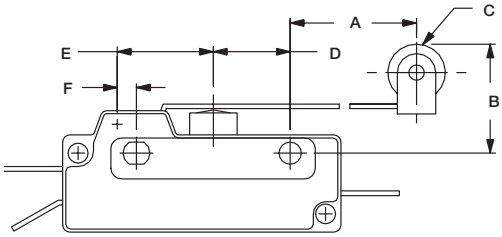

FIG. 4
Lever roller (High Force)

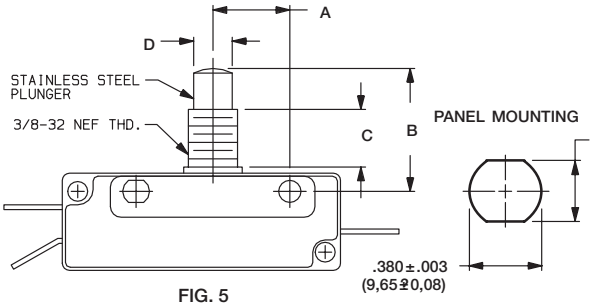

FIG. 5
High Overtravel Plunger

Torque 20 in/lbs max. (Nut)

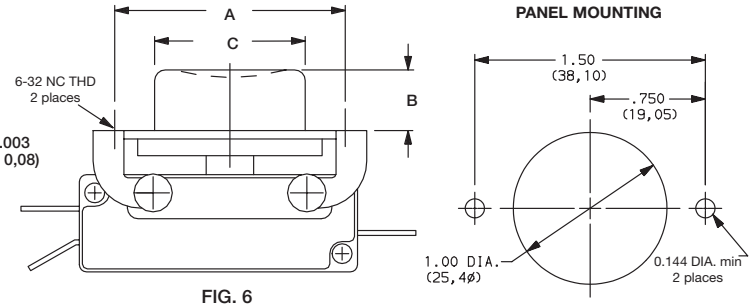

FIG. 6
B1 – Black Button
BB – Red Button

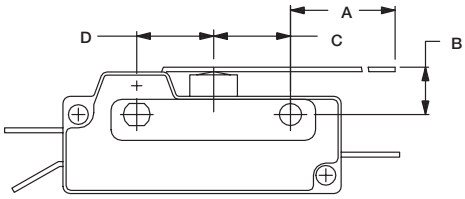

FIG. 7
Lever

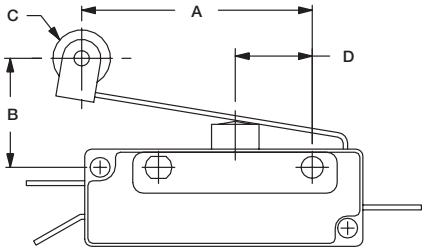

FIG. 8
Leaf Roller

Third Angle Projection

Dimensions are shown: Inch (mm)
Specifications and dimensions subject to change

A Series
General Purpose Snap-acting Switches

ACTUATOR

SWITCH CHARACTERISTICS

OPTION CODE	MAXIMUM OPERATING FORCE (OZ./GRAMS)				MINIMUM RELEASE FORCE (OZ./GRAMS)				MAXIMUM PRETRAVEL				MINIMUM OVERTRAVEL				OPERATING POSITION			
	GG S.P.	KH S.P.	PD D.P	PF D.P.	GG S.P.	KH S.P.	PD D.P	PF D.P.	GG S.P.	KH S.P.	PD D.P	PF D.P.	GG S.P.	KH S.P.	PD D.P	PF D.P.	GG S.P.	KH S.P.	PD D.P	PF D.P.
A0	1.5 42.5	4 113	6 170	10 283	0.3 8.5	0.5 14	1 28		.312 (7,92)				312 (7,92)		.187 (4,75)		.718 (18,24)			
A2	1.5 42.5	4 113	6 170	10 283	0.4 11	0.5 14	1 28		.25 (6,4)				.14 (5,6)				.718 (18,24)			
B1	8 227	20 567	30 850	40 1134	1 28	3 85	6 170		.050 (1,27)				050 (1,27)				—			
BB	8 227	20 567	30 850	40 1134	1 28	3 85	6 170		.050 (1,27)				.050 (1,27)				—			
J0	5 142	20 567	30 850	40 1134	1 28	3 85	6 170		.050 (1,27)				.187 (4,75)				—			
L0	3 85	12 340	18 510	22 624	0.5 14	1 28	2 56.7		.281 (7,14)				062 (1,57)				.312 (7,92)			
P0	8 227	20 567	30 850	40 1134	1 28	3 85	6 170		.050 (1,27)				.050 (1,27)				—			
Q0	5 142	20 567	30 850	40 1134	1 28	3 85	6 170		.050 (1,27)				.050 (1,27)				—			
T0	1.5 42.5	4 113	6 170	10 283	0.3 8.5	0.5 14	1 28		.312 (7,92)				.187 (4,75)				312 (7,92)			
W0	3 85	12 340	18 510	22 624	0.5 14	1 28	2 56.7		.281 (7,14)				.062 (1,57)				.718 (18,24)			

NOTE: For basic switch operating forces, see page J-57.

TERMINATIONS

4A .250" QUICK CONNECT

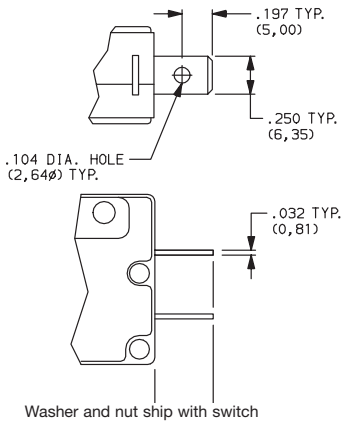

Washer and nut ship with switch

NOTE: Terminals can be supplied at various angles. Other terminal styles can be supplied for special applications. Consult Customer Service Center for special requirements.

CIRCUITRY

C DT (Double Throw, Normally Open & Normally Closed)

W ST N.C. (Single Throw, Normally Closed)

Y ST N.O. (Single Throw, Normally Open)

NOTE: To select number of poles, see NO. POLES section, page J-56

Third Angle Projection

Dimensions are shown: Inches (mm)
Specifications and dimensions subject to change